Appendix A

Diagrams

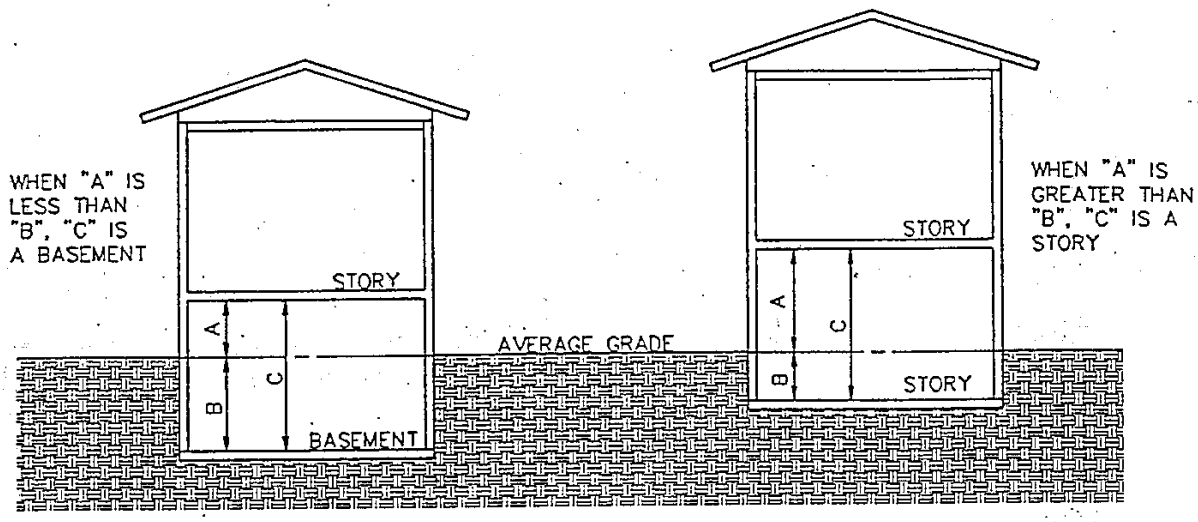

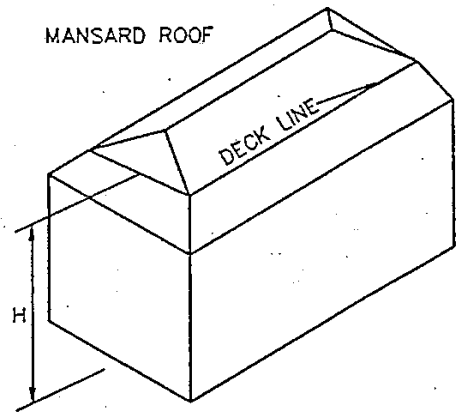

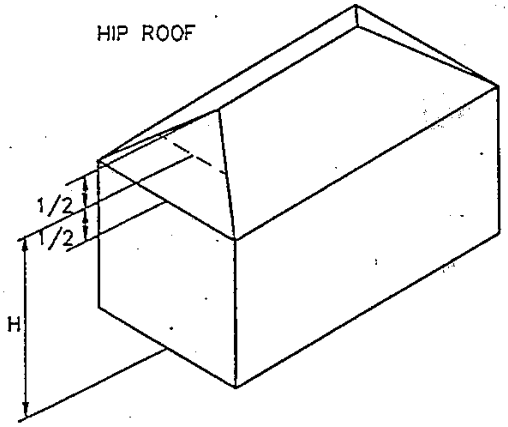

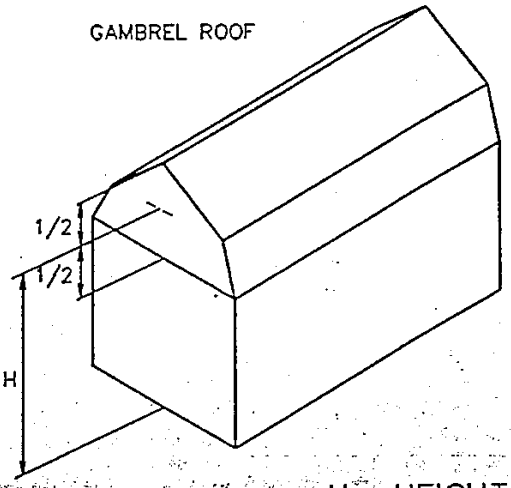

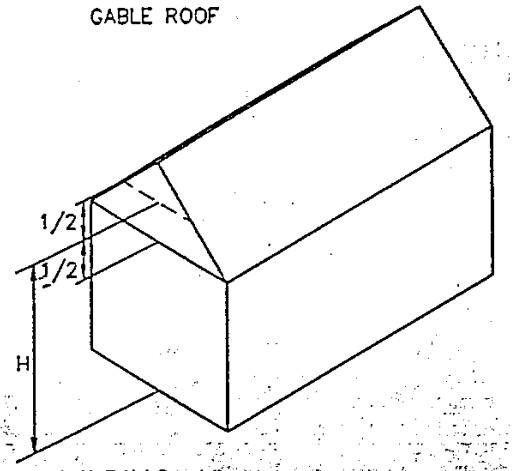

H= HEIGHT OF BUILDING

RETTEW
Associates, Inc.

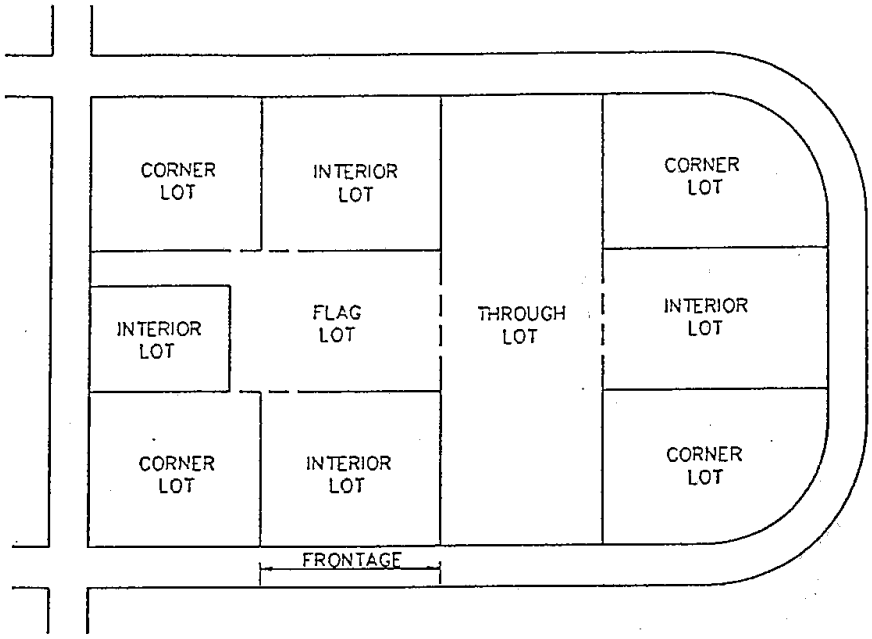

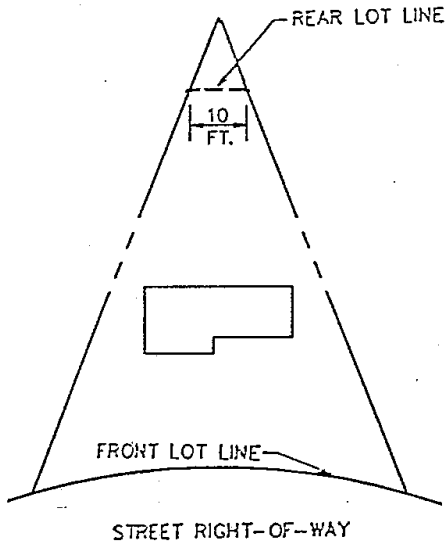

RETTEW
Associates, Inc.

LOT DESIGN

CORNER LOT

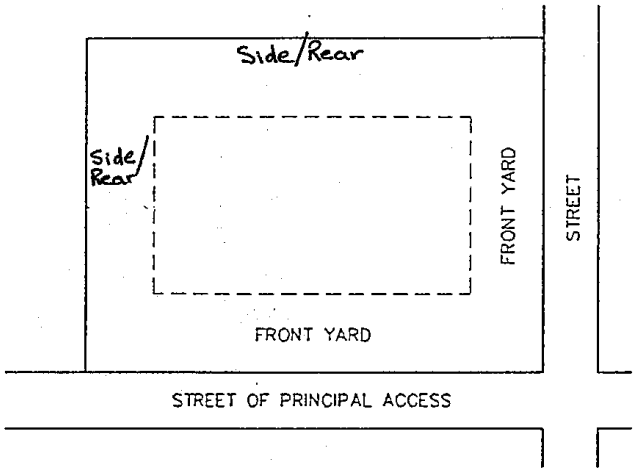

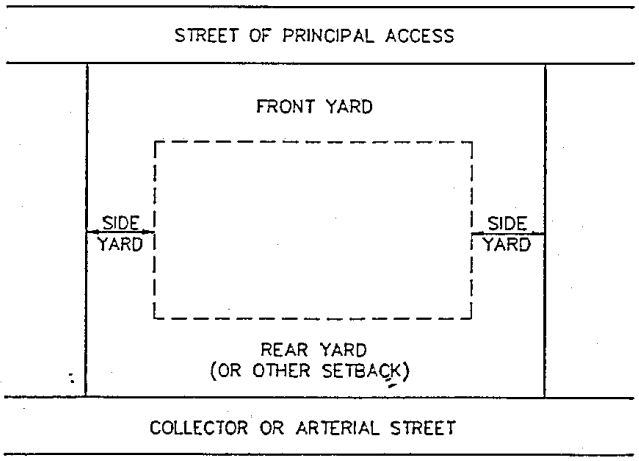

REVERSE FRONTAGE LOT

RETTEW
Associates, Inc.

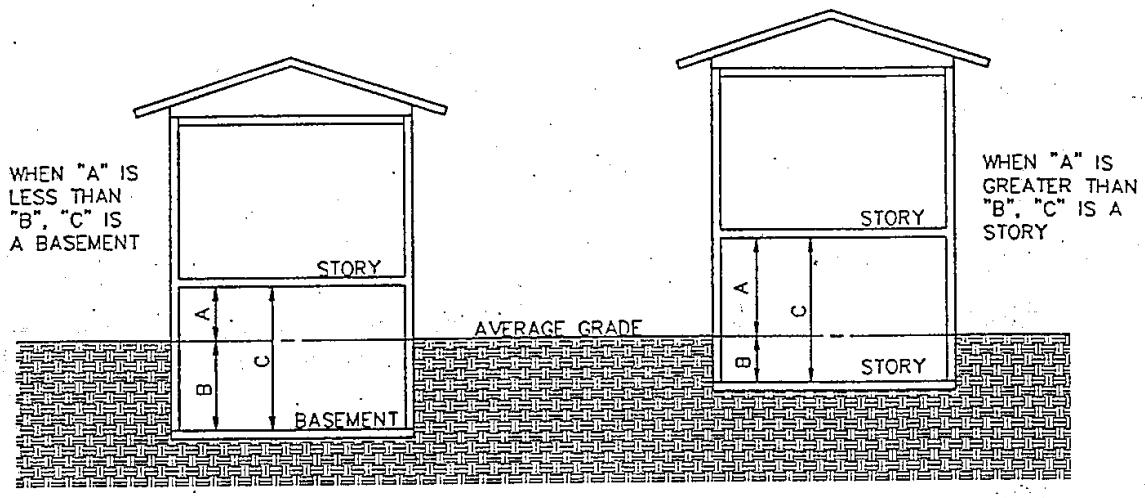

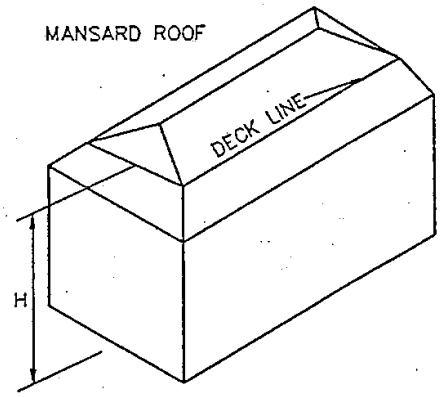

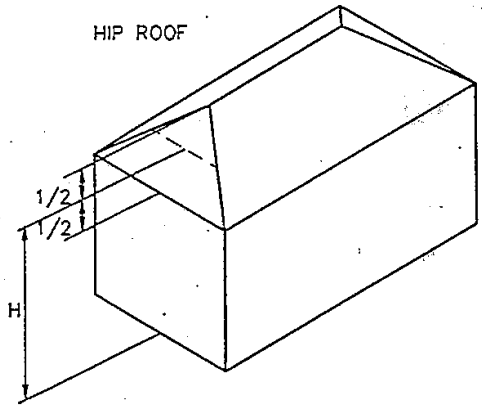

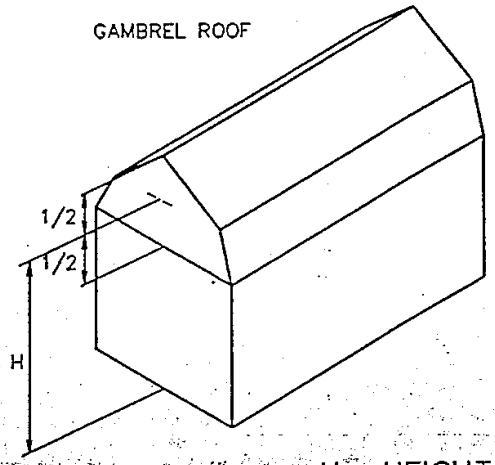

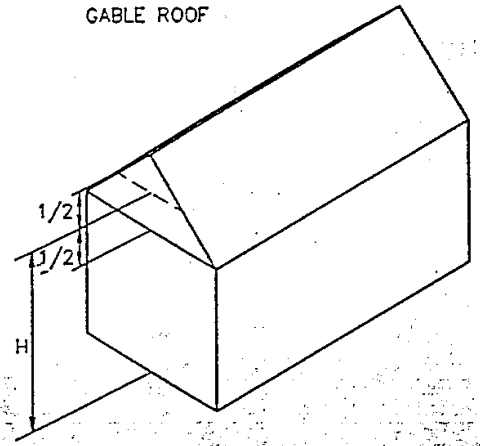

H= HEIGHT OF BUILDING

RETTEW
Associates, Inc.

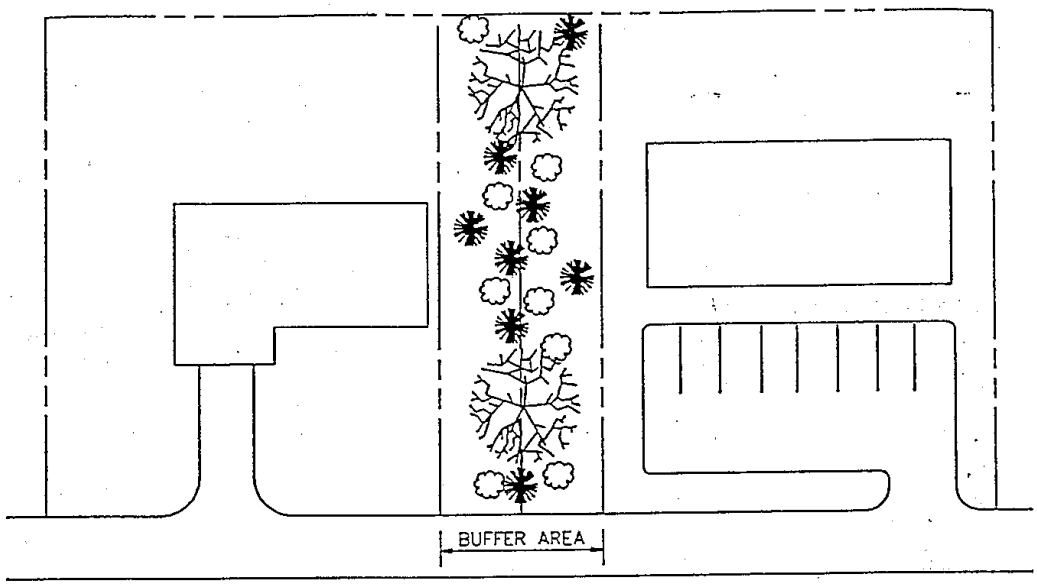

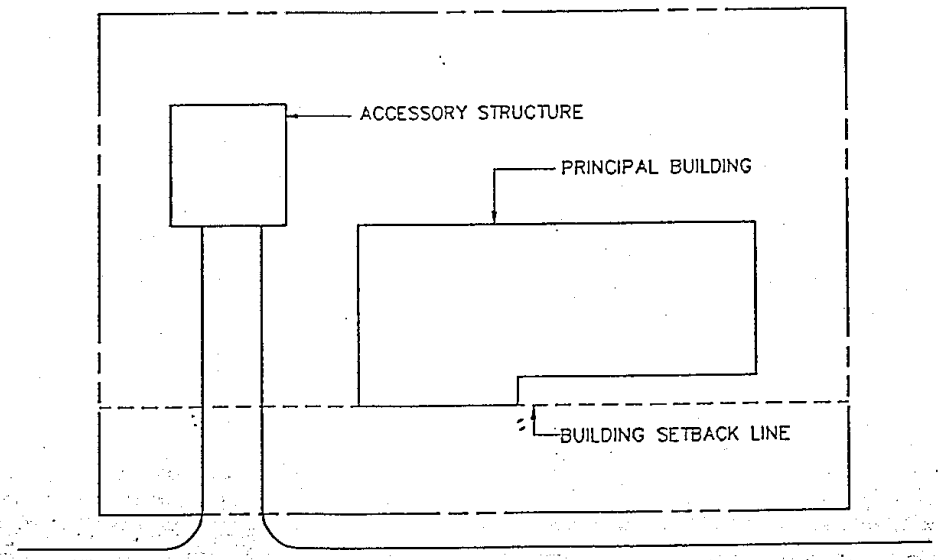

RETTEW
Associates, Inc.

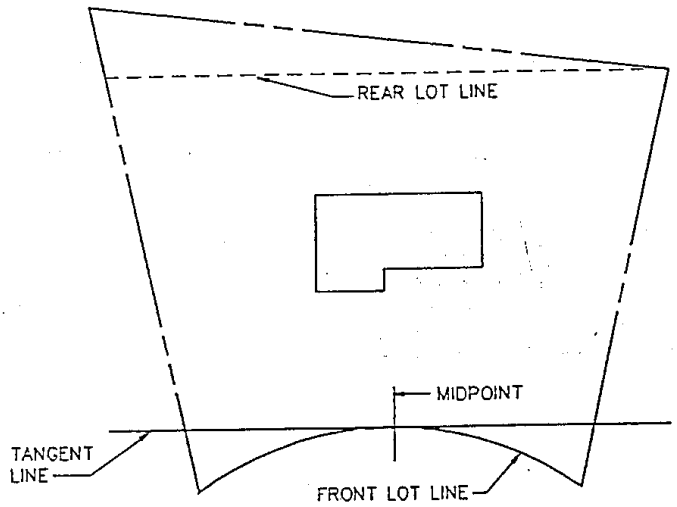

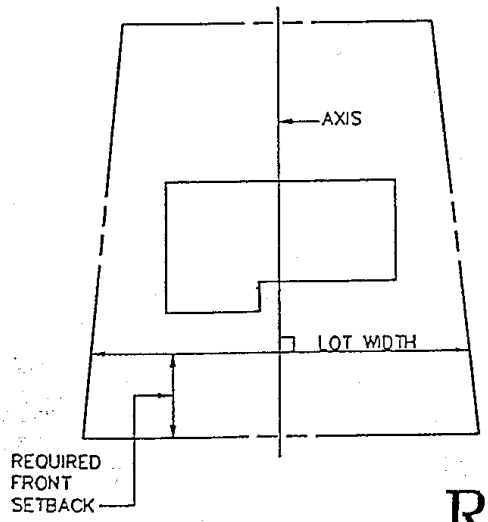

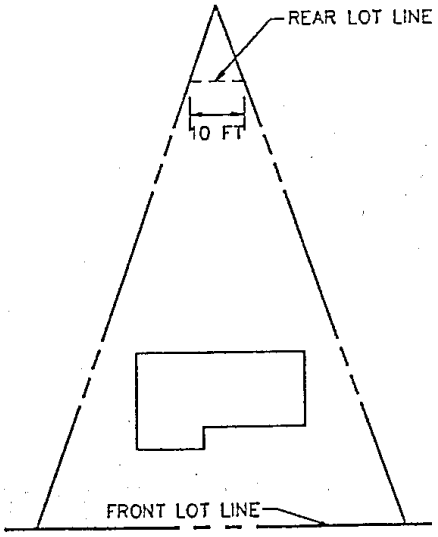

RETTEW
Associates, Inc.

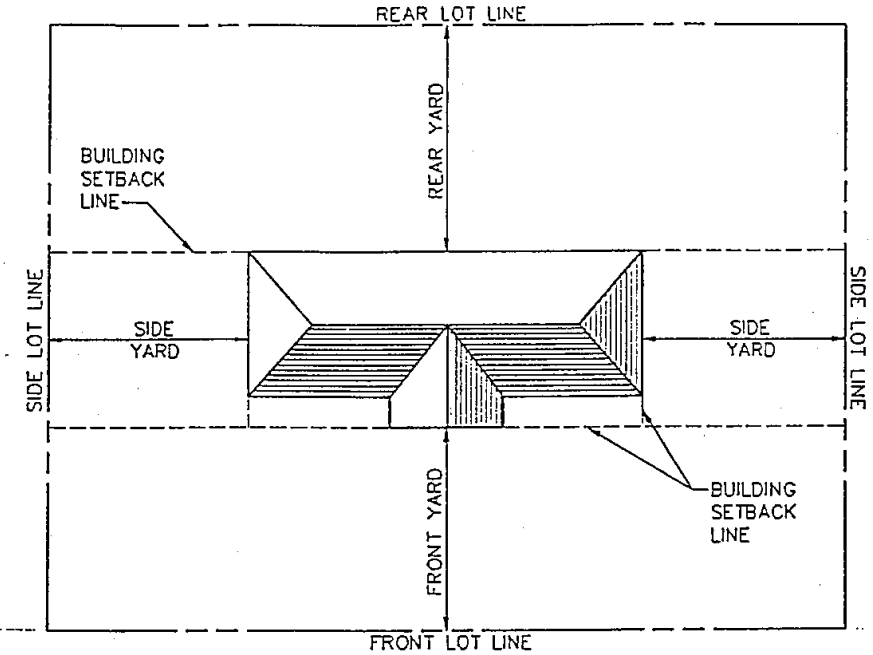

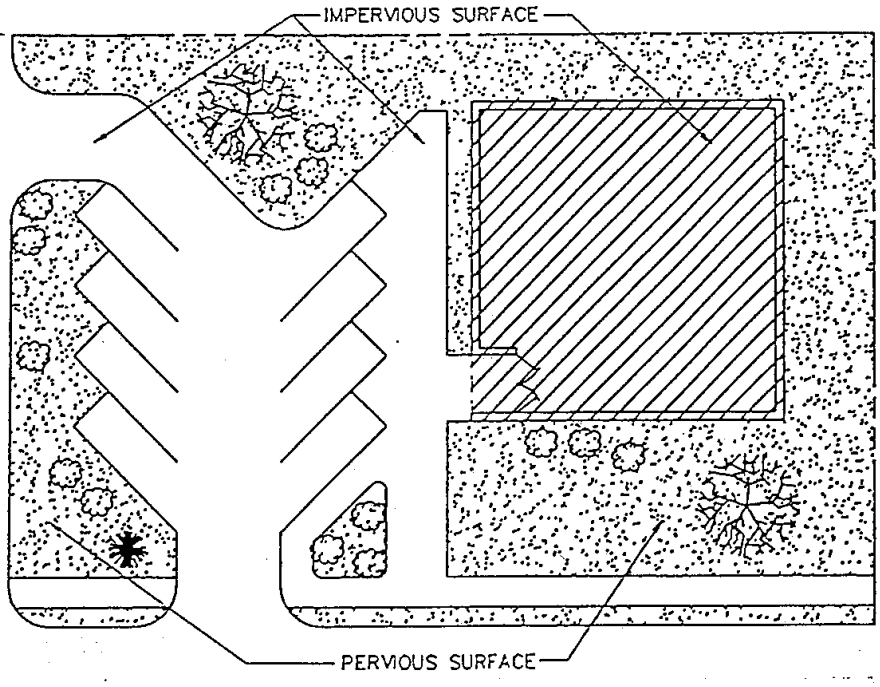

RETTEW
Associates, Inc.